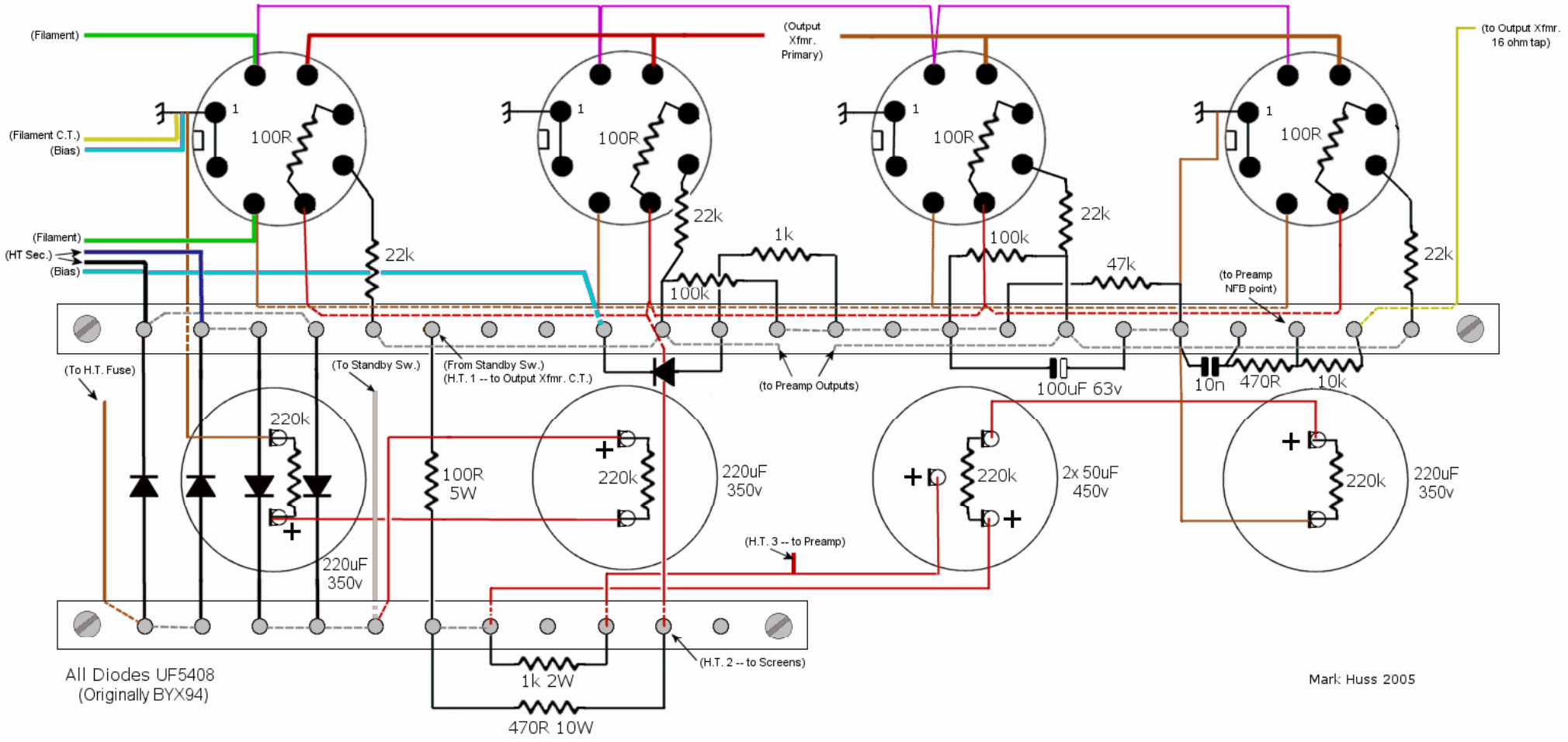HIWATT 100 Watt Output and Power Supply